# Lasertack New Laser Generation

**HPL-1319-QM**/100W

## WATER COOLING LD PUMPED ALL-SOLID-STATE Q-SWITCHED LASER at 1319nm

All solid state Q-switched infrared laser at 1319nm has the features of high peak power, high repetition rate, and short pulse duration, which is widely used in marking, carving, measure, science research, military, and so on.

**SPECIFICATIONS**

| | |
|---|---|
| Wavelength (nm) | 1319±1 |
| Operating mode | Q-switched: AOM (Acousto-Optic Modulation) |
| Average power (W) | >100 |
| Pulse duration (ns) | ~250 @10kHz |
| Rep. rate (kHz) | 10~20 (It is possible to customize other repetition rates ) |
| Single pulse energy (mJ) | >10 @10kHz |
| Peak power (kW) | >65 @ 10kHz |
| Ave power stability (over 4 hours) | <3% or <5% |
| Beam divergence, full angle (mrad) | <3.5 |
| Beam diameter at the aperture (mm) | ≥15 |
| Beam height from base plate (mm) | 55 |
| Warm-up time (minutes) | <10 |
| Cooled method | Water Cooled |
| Operating temperature (℃) | 15~35 |
| Power supply (220V AC) | PSU-HPL(2U×2) |
| Expected lifetime (hours) | 10000 |
| Warranty period | 1 year |

| HPL-1319-QM(100W) | PSU-HPL-Q(2U) | PSU-HPL-CW(2U) | Water Chiller |
|---|---|---|---|
| 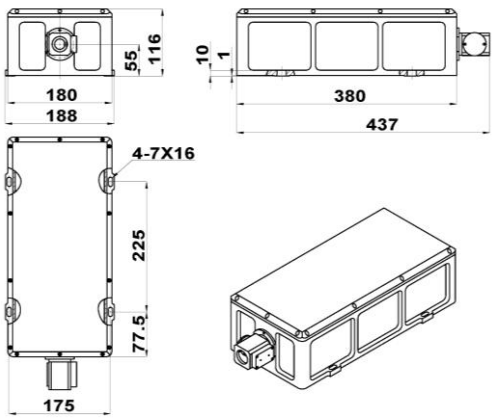 | 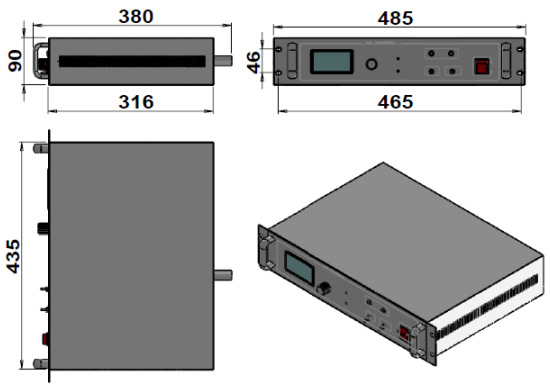 | 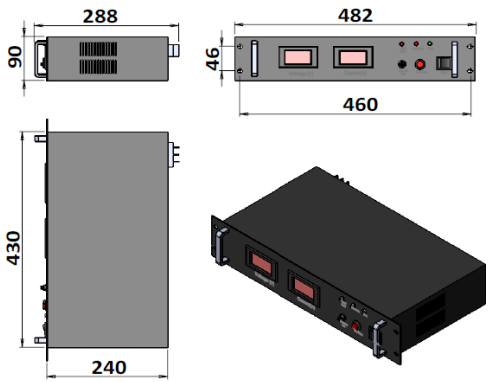 | 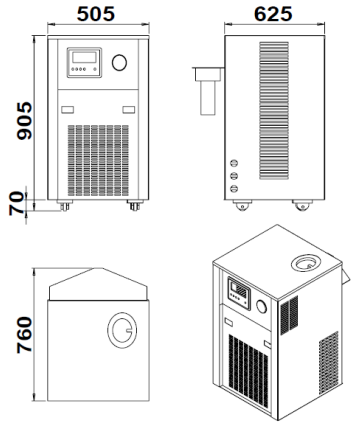 |
| 437(L)×188(W)×116(H) mm$^3$, 15kg | 380(L) ×485(W) ×90(H) mm$^3$, 7.5kg | 288(L) ×482(W) ×90(H) mm$^3$, 5.5kg | 505 (L)×625(W)×975(H) mm$^3$, 95kg |